RESOL AM1 alarm module

Mounting

Connection

Function

AM1 alarm module

US/CA

Manual

www.resol.com

48005020

Thank you for buying this RESOL product.
Please read this manual carefully to get the best performance from this unit.
Please keep this manual carefully.

Safety advice

Please pay attention to the following safety advice in order to avoid danger and damage to people and property.

Instructions

Attention must be paid to the valid local standards, regulations and directives!

Target group

These instructions are exclusively addressed to authorised skilled personnel.

- Only qualified electricians should carry out electrical works.
- Initial installation must be effected by qualified personnel named by the manufacturer

This manual contains important information about safe and proper usage of this product. Please keep this manual for future reference.

Table of contents

Safety advice 2
Overview 3
Technical Data 3
1. Mounting 4
2. Connection 4
3. Function 5
Imprint 8

Subject to technical change. Errors excepted.

Description of symbols

WARNING!	**Warnings are indicated with a warning triangle!** → They contain information on how to avoid the danger described.

Signal words describe the danger that may occur, when it is not avoided.

Warning means that injury, possibly life-threatening injury, can occur.
Attention means that damage to the appliance can occur.

Note
Notes are indicated with an information symbol.

→ Arrows indicate instruction steps that should be carried out.

Information about the product

Proper usage

The RESOL AM1 alarm module is to be used as an interface for the failure signal transmission between RESOL devices and external applications in compliance with the technical data specified in this manual.
Improper use excludes all liability claims.

Note
Strong electromagnetic fields can impair the function of the device.

→ Make sure the device is not exposed to strong electromagnetic fields.

Disposal

- Dispose of the packaging in an environmentally sound manner.
- Dispose of old appliances in an environmentally sound manner. Upon request we will take back your old appliances bought from us and guarantee an environmentally sound disposal of the devices.

© RESOL 09188_AM1_manus.indd

Overview

- **Reliable failure signal by LED**
- **Connection to a Building Management System (BMS) possible**
- **Supply and control via RESOL VBus®**
- **Sturdy and weatherproof housing in shapely design**
- **Simple installation**

AM1 alarm module

The AM1 alarm module is designed to signal system failures. It is to be connected to the VBus® of the controller and issues an optical signal via a red LED if a failure has occurred. The AM1 also has a potential-free relay output, which can e. g. be connected to a building management system (BMS). Thus, a collective error message can be issued in the case of a system failure.
Depending on the controller and the sensors connected, different fault conditions can be signalled, e. g. sensor failures, excess or negative system pressure as well as errors in the flow rate, such as a dry run of the pump. The AM1 alarm module ensures that occurring failures can be immediately recognized and repaired, even if the system and the controller are difficult to access or located in a remote place. Thus, the reliability and the stable yield of the system are ensured.

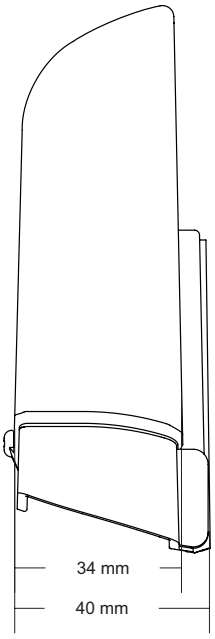

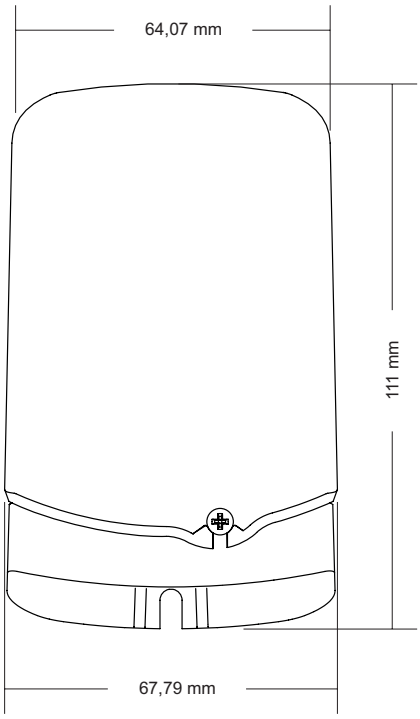

Technical data
Housing: Plastic
Upper part of the housing:
PC 2207 UV
Base part of the housing:
Karilen E 42 D - H201
Protection type: IP 54
Ambient temperature: -13 ... +158 °F
Dimensions: 111 × 68 × 40 mm
Mounting: Wall mounting
Display: 1 LED
Power supply: via RESOL VBus®
Interface: RESOL VBus®
Output: 1 potential-free relay
Switching capacity: 30 VDC, 1 A;
125 VAC, 0,5 A

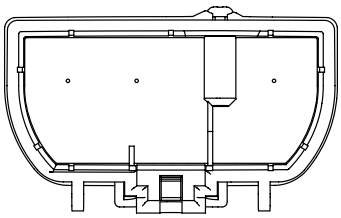

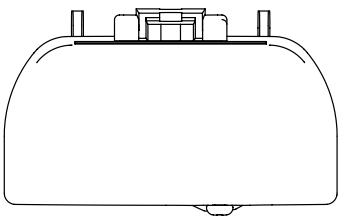

Included

- **AM1 alarm module**
- accessory bag with
  2 × screws and wall plugs for wall mounting
  1 × terminal block

The AM1 can be connected to all RESOL devices equipped with a VBus®.

© RESOL 09188_AM1_monus.indd

1. Mounting

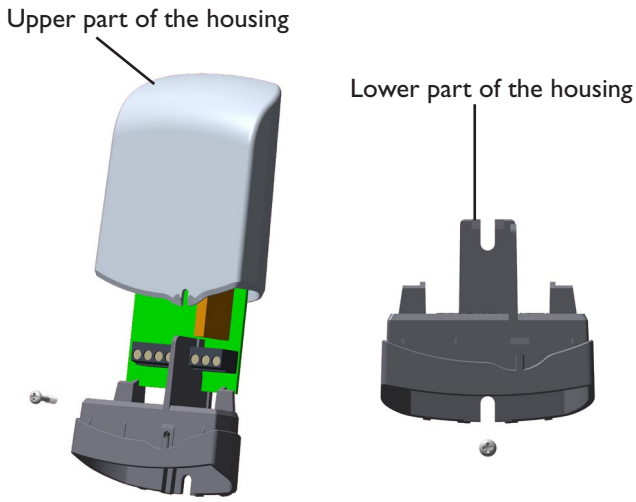

ATTENTION!	**ESD damage!**
	Electrostatic discharge can lead to damage to electronic components! → Take care to discharge properly before touching the inside of the device!

Note
If a moisture protection is necessary, mount the device vertically.

To mount the AM1, proceed as follows::

→ Unscrew the housing screw and pull off the upper part of the housing upwards

→ Mark the fastening points on the wall (centres 5 cm) and drill the necessary holes

→ Screw the lower part of the housing to the wall using the screws and wall plugs from the accessory bag

→ Relocate the upper part of the housing and refasten it

2. Connection

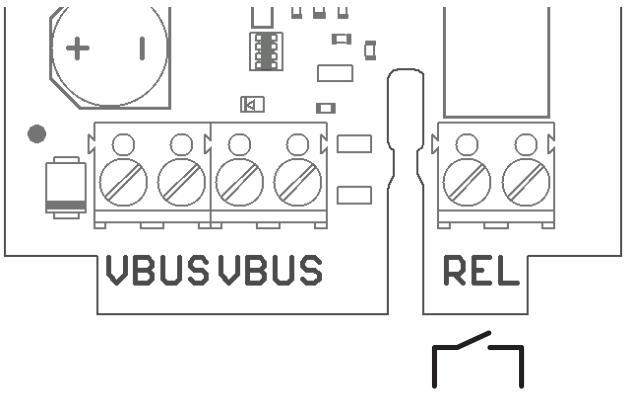

Terminals of the AM1

The AM1 is designed for simple connection to RESOL controllers or calorimeters via the RESOL VBus®. A power supply connection is not necessary.

For easier access to the terminals, the circuit board can be taken from its retaining fixture.

Connect the VBus® cable to the terminals marked „VBUS" with either polarity.

To the terminals marked „REL", a load can be connected with either polarity. When connecting a load, observe the switching capacity stated in the Technical data on pg. 3.

The bus cable can be extended with a two-wire cable (bell wire). The cross section of the cable must be at least 0,5 mm² and the cable can be extended up to 50 m in the case of a single connection.

ATTENTION!	Low voltage cables must not run together in a cable conduit with cables carrying a higher voltage than 50 V. → Pay attention to the local regulations!

© RESOL 09188_AM1_monus.indd

3. Function

The AM1 alarm module is an interface for the failure signal transmission between RESOL devices and external applications. It is to be connected to a RESOL controller or calorimeter via the RESOL VBus®.

When the AM1 is operational, the LED will glow continuously to signal operational readiness.

→ If the LED does not glow, check the connection of the device!

The AM1 receives and processes the VBus® data packets of the device connected. In the case of an incoming failure signal, the integrated LED flashes and the AM1 operates a potential-free relay.

The relay can e. g. be used to connect an additional signalling device, or to connect to a building management system (BMS). The failure signals can thus be issued as a collective error message by the BMS.

© RESOL 09188_AM1_monus.indd

Notes

© RESOL 09188_AM1_monus.indd

Notes

© RESOL 09188_AM1_monus.indd

Distributed by:

RESOL - Elektronische Regelungen GmbH

Heiskampstraße 10
45527 Hattingen / Germany

Tel.: +49 (0) 23 24 / 96 48 - 0
Fax: +49 (0) 23 24 / 96 48 - 755

www.resol.com
info@resol.de

Important notice:
The text and drawings in this manual are correct to the best of our knowledge.. As faults can never be excluded, please note: Your own calculations and plans, under consideration of the current standards and national regulations should only be basis for your projects. We do not offer a guarantee for the completeness of the drawings and texts of this manual - they only represent some examples. They can only be used at your own risk. No liability is assumed for incorrect, incomplete or false information and / or the resulting damages.

Reprinting / copying
This mounting- and operation manual including all parts is copyrighted. Another use outside the copyright requires the approval of RESOL - Elektronische Regelungen GmbH. This especially applies for copies, translations, microfilms and the storage into electronic systems.
Editor: RESOL - Elektronische Regelungen GmbH

Please note:
The design and the specifications may be changed without notice.
The illustrations may differ from the original product.

© RESOL 09188_AM1_monus.indd